VWR sympHony

Meter User Guide

sympHony™

Table of Contents

Chapter I
Introduction

Congratulations! You have selected a VWR® sympHony™ meter designed for electrochemistry measurements in the field or in the laboratory.

- Single parameter meters provide single measurement of pH, dissolved oxygen, or conductivity.
- Dual parameter meters provide dual measurements of pH/dissolved oxygen, pH/conductivity, or pH/ISE (ion selective electrode).
- Multiple parameter meters provide multiple measurements of pH, ISE, dissolved oxygen, and conductivity.

All meters include a temperature measurement function. All meters with pH measurement capability include a mV/relative mV/ORP function.

Convenient Meter Features

Built to meet the demands of busy, multiple user laboratories or plant environments, all meters are microprocessor controlled aiding in the delivery of accurate and precise measurements. To better meet the needs of users in environmental protection and control, food and beverage, pharmaceutical, and consumer product laboratories, the sympHony meters include these key features:

- **Password Protected Methods** – The meter will save up to ten custom measurements and calibrations for future reference. Password protection of the setup menu eliminates any tampering with methods as multiple users access only the procedure most appropriate to their work.
- **AUTO-READ™** – The meter will take a measurement and automatically print or log the data when the reading becomes stable. The measurement is frozen on the display until the user prompts the meter to take a new measurement.

- **Stirrer Control** – Benchtop meters have a control for the stirrer probe and the AUTO-STIR™ BOD probe, eliminating the need for additional stir plates and bars.

- **Display Backlight** – When the meter is on, a quick press of will turn the backlight on and off. When the meter is operating on battery power, the backlight will automatically turn off after two minutes to conserve power. When batteries are low, the backlight will no longer turn on.

- **Automatic Shut-off** – All sympHony meters will shut down after 20 minutes without a keypress. This maximizes battery power on portable meters and benchtop meters that are being run on battery power.

- **Audible Signals** – The meter will beep whenever a key is pressed, providing immediate verification that the user's input was received.

- **Visual Alarm Signals** – Flashing and icons indicate that calibration settings need adjustment. For more detail, refer to subsequent sections of this user guide that discuss specific measurement techniques.

An easy-to-use reference guide, attached to each meter, supports daily meter use.

Note: *Please read this user guide thoroughly before using your benchtop or portable meter. Any use outside of these instructions may invalidate your warranty and cause permanent damage to the meter.*

Chapter II
Display

General Description

Throughout a given process, the display on a sympHony meter provides temperature and calibration data. The temperature appears in the left, top corner of the display. The icon indicates that a calibration mode or calibration setup menu is active. The **man**, **2**, **4**, **7**, **9**, **10**, and **12** icons indicate which pH buffers were saved after a pH calibration is performed. The **setup** icon only appears when the meter is in setup mode. The icon indicates an error condition and when it is displayed with the icon, a calibration alarm or sensor quality issue exists. The AR icon indicates that the AUTO-READ measurement mode is active and is discussed in greater detail in the **Meter Setup** section.

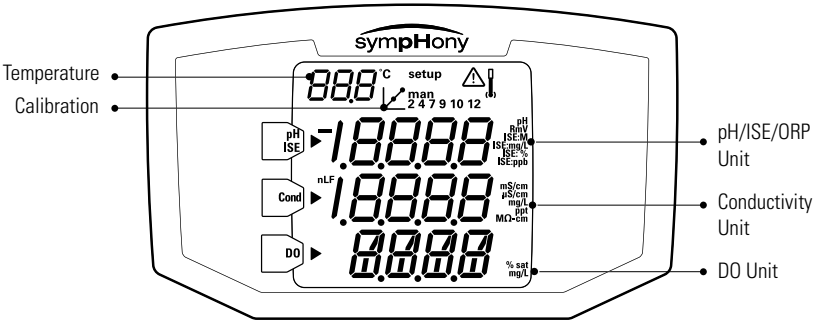

Multi-Parameter Meter

This is the display of the sympHony meter capable of multi-parameter measurements. The single and dual parameter meters will have fewer measurement lines, depending on the meter capabilities.

Note: *In the measurement mode, the three main lines of data on the meter display correspond to what is being measured.*

Measurement Unit Icons

In the measurement mode, the arrow icon on the left side of the display screen indicates the active line. Press to move the arrow icon to the desired line and press / to scroll through the measurement unit icons associated with the selected line. The measurement unit icons for the sympHony multi-parameter meter are shown below. The single and dual parameter meters will have fewer measurement lines and icons, depending on the meter capabilities.

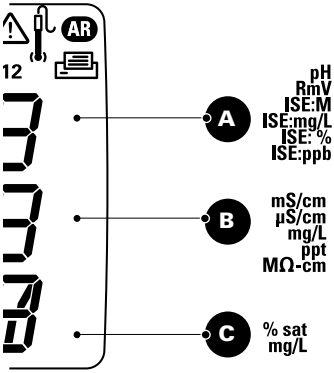

pH, mV, relative mV or ISE

Conductivity, TDS, salinity or resistivity

Dissolved oxygen as % saturation, dissolved oxygen as concentration, or barometric pressure

The units of measurement, which are displayed on the right side of the screen, will flash until the reading is stable.

Note: *If a measurement line is not needed, press to move the arrow icon to the measurement line that is not needed and press / until the measurement line is completely blank.*

Chapter III
Keypad

General Description

The keypad layout is the same for all sympHony meters. The portable meters have nine keys. The benchtop meters have ten keys due to the addition of the stir key ( ).

Portable Keypad

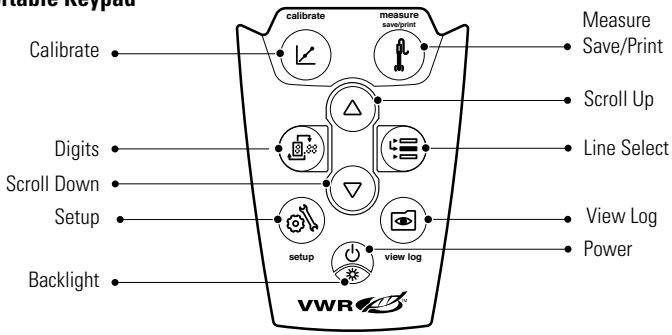

Benchtop Keypad

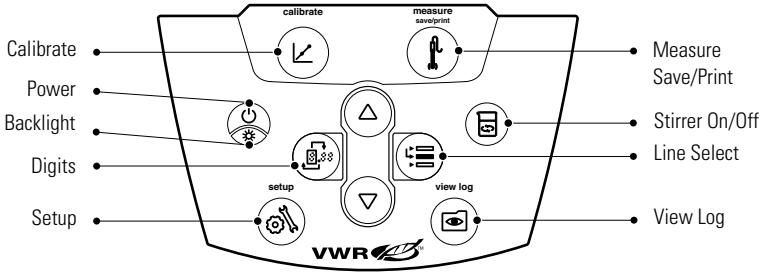

Key Definitions

Key	Description	Key	Description
	Turns the meter on, if the meter is off. Toggles the backlight on and off, if the meter is on. If the meter is on, hold down the key for about three seconds to turn off the meter.		Changes the measurement units of the selected line in the measurement mode. Changes the value on the selected line in the setup, methods and log view modes. Edits the value of the flashing digit for setup, password entry and calibration modes.
	Scrolls the arrow icon on left of screen among the three display lines, so the selected line can be edited or calibrated.		Selects the next digit to edit and moves the decimal point for setup, password entry and calibration modes.
	Starts the calibration for the selected line in the measurement mode. If the arrow icon points to the top line and the displayed units are pH, pressing the key will start a pH calibration. Each time the key is pressed in the calibration mode, the meter will accept the calibration point and move to the next point until the maximum number of calibration points are reached.		Prints and logs a measurement in the continuous or timed measurement modes. Prints, logs and freezes the display when the reading becomes stable in the AUTO-READ measurement mode. Exits the setup menu and returns to measurement mode. Accepts the calibration and returns to measurement mode.
	Enters the setup menu, starting with selected line in the measurement mode. If the arrow icon points to the top line and the displayed units are ISE, pressing the key will enter the ISE setup screen.		Enters the log view and download menu.
			Turns the stirrer on and off.

Chapter IV
Preparation

Installing the Power Adapter

The universal power adapter that is included with your benchtop meter is the only power adapter recommended for use with this unit. The use of any other power adapter will void your meter warranty. The external electrical power adapter is rated to be operated at 100 to 240 VAC, 0.5 A, 50/60 Hz.

Based on your wall outlet, select one of the four plug plates provided (110 V, 220 V, 240V) and slide it into the grooves on the adapter. A click will be heard when the plug is properly in place.

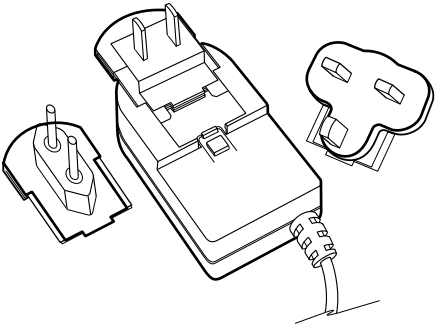

Connect the output plug of the power adapter to the power input on the benchtop meter. Refer to the diagram in the **Connecting the Electrodes** section.

Batteries can be installed in the benchtop sympHony meters, so the meter setup settings are protected if the meter is disconnected from the wall outlet or a brief power outage occurs.

Installing the Batteries

The sympHony meters use four AA alkaline batteries. Do not use lithium or rechargeable batteries. Improper installation of non-alkaline batteries could create a hazard.

Note: *For benchtop meters, the installation of batteries is not required if the unit will always be connected to a power source via the universal power supply. For portable meters, the batteries are supplied from the factory. To access the battery compartment in portable meters, loosen the two screws in the back of the meter.*

1. Confirm that the meter is off and gently place the meter upside down on a clean, lint-free cloth to prevent scratching the display.

2. Remove the battery case cover.

3. Insert new batteries with the + side orientation as depicted in the battery compartment housing.

4. Replace the battery case cover.

5. Stored data, calibrations and methods will remain in the meter's nonvolatile memory when the batteries are being replaced. However, the date and time may need to be reset when the batteries are changed.

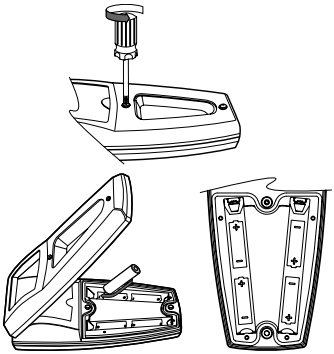

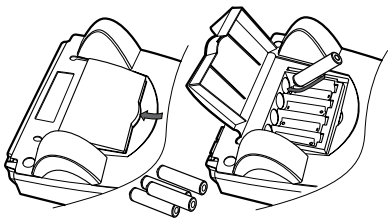

Connecting the Electrodes

Follow the diagrams below to correctly connect electrodes and probes to the meter. The multi-parameter meter is depicted; single parameter and dual parameter meters will have fewer connections, depending on the meter measurement capabilities.

Benchtop Meter – Electrode Connections

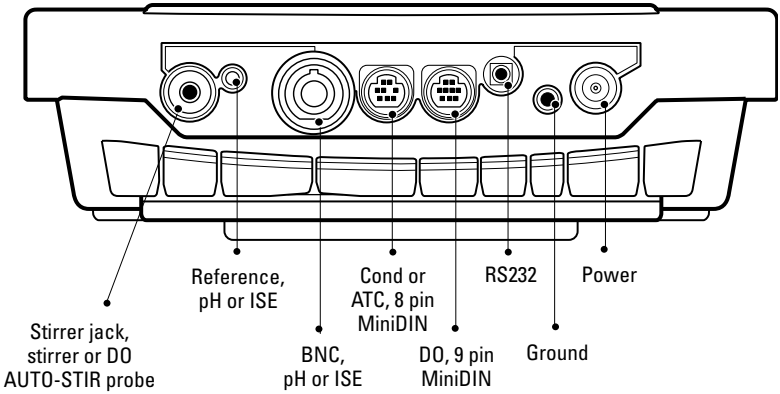

Portable Meter – Electrode Connections

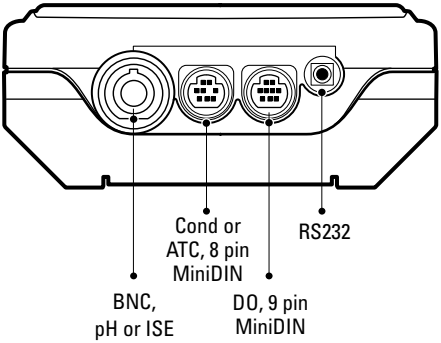

Meter Connections with Multiple Functions

- Use the BNC input to connect pH, ISE and ORP electrodes with a BNC or waterproof BNC connector.
- Benchtop meters have a reference input for connecting a separate reference electrode. Reference electrodes require an appropriate sensing electrode for measurements.
- Use the waterproof 8 pin MiniDIN input for conductivity probes or for automatic temperature compensation (ATC) probes.
- The DO AUTO-STIR probe uses the waterproof 9 pin MiniDIN input and the stirrer jack.

Turning on the Instrument

With the batteries installed in the portable meters and the power adapter attached or the batteries installed in the benchtop meter, press to turn on the meter.

Press when the meter is powered on to toggle the backlight on and off. When the benchtop meter is drawing line power, the backlight will stay on until is pressed.

To turn off the meter, press and hold for about three seconds.

Meter Maintenance

For routine meter maintenance, dust and wipe the meter with a damp cloth. If necessary, a warm water or a mild water-based detergent can be used.

Immediately remove any spilled substance from the meter using the proper cleaning procedure for the type of spill.

Chapter V
Meter Setup

Setup Menu

To navigate the setup menu:

1. Press to enter the setup menu.
2. Press / until the desired setup option is displayed on the top line.
3. Press to move the arrow icon to the middle line.
4. Press / until the desired setup option is displayed on the middle line.
5. Press to move the arrow icon to the bottom line.
6. To scroll through a list of options on the bottom line, press / until the desired option is displayed. To enter a numeric value for an option on the bottom line, press / to adjust each digit and to move to the next digit. For example, to change the pH measurement resolution press to scroll from 0.01 to 0.001 on the bottom display line.

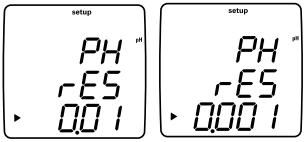

7. Press to move the arrow icon to the top line.
8. Repeat steps 2 through 7 to program a new setup option or press to exit the setup menu and return to the measurement mode.

Setup Menu Table

The following table is for the complete line of sympHony meters. Some sympHony meters may not include all of the options listed in this table. Refer to **Appendix A** for additional information on the special setup menu features.

Top Line	Middle Line	Bottom Line	Setup Menu Description (default setting, method specific)
PH	rES	0.1, 0.01, 0.001	pH measurement resolution **(0.01, yes)**
PH	bUF	USA, EUr0	pH buffer set for automatic buffer recognition during calibration, USA buffers are 1.68, 4.01, 7.00, 10.01, 12.46 and EUr0 buffers are 1.68, 4.01, 6.86, 9.18 **(USA, yes)**
ISE	rES	1, 2, 3	ISE measurement resolution in significant figures **(1, yes)**
ISE	UnIt	m, mgL, PEr, PPb, n0nE	ISE measurement units **(PPb, yes)**
ISE	rAng	L0w, HIgH	ISE concentration range for calibration stability criteria **(HIgH, yes)**
ISE	nLIn	AUt0, 0FF	ISE automatic blank correction for low-level calibration **(AUt0, yes)**
C0nd	tC	0FF, LIn, nLF	Conductivity temperature compensation type, LIn is for linear, nLF is for non-linear pure water samples **(LIn, yes)**
C0nd	C0EF	0.0 to 10.0	Conductivity temperature compensation coefficient in % change in conductivity per °C, appears if LIn was selected for tC **(2.1, yes)**
C0nd	tdSF	0.00 to 10.0	Conductivity TDS factor value **(0.49, yes)**
C0nd	CELL	0.001 to 199.0	Conductivity default cell constant value for automatic conductivity calibration mode **(0.475, yes)**
C0nd	trEF	15, 20, 25	Conductivity reference temperature **(25, yes)**
C0nd	tyPE	Std, 1, 2, 3, 4, 5, 6, 7	Conductivity cell type and selectable range **(Std, yes)**
d0	rES	0.1, 1 % sat	DO % saturation measurement resolution **(0.1, yes)**
d0	rES	0.01, 0.1 mg/L	DO mg/L measurement resolution **(0.01, yes)**
d0	bAr	AUt0, mAn	DO barometric pressure compensation type **(AUt0, yes)**
d0	PrES	450.0 to 850.0	DO manual barometric pressure compensation value, appears if mAn was selected for bAr **(760.0, yes)**
d0	SAL	AUt0, mAn	DO salinity correction type **(AUt0, yes)**
d0	SALF	0 to 45	DO manual salinity correction value, appears if mAn was selected for SAL or a DO meter without a conductivity mode is used **(0, yes)**
d0	CALt	AIr, H20, mAn, SEt0	DO calibration type **(AIr, yes)**
dUE	PH	0 to 9999	pH calibration alarm value in hours, 0 is off **(0, yes)**
dUE	0rP	0 to 9999	ORP calibration alarm value in hours, 0 is off **(0, yes)**
dUE	ISE	0 to 9999	ISE calibration alarm value in hours, 0 is off **(0, yes)**
dUE	C0nd	0 to 9999	Conductivity calibration alarm value in hours, 0 is off **(0, yes)**
dUE	d0	0 to 9999	DO calibration alarm value in hours, 0 is off **(0, yes)**

Top Line	Middle Line	Bottom Line	Setup Menu Description (default setting, method specific)
rEAd	tyPE	AUt0, tImE, C0nt,	Measurement read type as AUTO-READ, timed or continuous **(AUt0, yes)**
rEAd	tInE	00:05 to 99:59	Timed measurement value in minutes and seconds **(01:00, yes)**
L0g	dEL	n0, YES	Delete datalog after download option **(n0, yes)**
gEn	dEgC	-5.0 to 105	Manual temperature value **(25.0, yes)**
gEn	StIr	0FF, 1, 2, 3, 4, 5, 6, 7	Stirrer speed – benchtop meters only **(4, yes)**
gEn	AUt0	0n, 0FF	Automatic meter shutoff option **(0n, no)**
gLP	SEt	0FF, 0n	GLP option, GLP feature enables or disables methods **(0FF, no)**
gLP	PASS	0000 to 9999	Password entry **(0000, no)**
dAtE	H0Ur	HH00 to HH23	Hour setting **(HH12, no)**
dAtE	tInE	mm00 to mm59	Minute setting **(mm00, no)**
dAtE	tYPE	mdY, dmY	Displayed date format as month, day, year or day, month, year **(mdY, no)**
dAtE	YEAr	2000 to 2099	Year setting **(2004, no)**
dAtE	dAtE	mm01 to mm12	Month setting **(mm01, no)**
dAtE	dAY	dd01 to dd31	Day of the month setting **(dd01, no)**
r232	bAUd	1200, 2400, 4800, 9600	Baud rate setting **(9600, no)**
r232	0UtF	Prnt, C0mP	Output format for printer or computer, C0mP format is comma delimited **(Prnt, no)**

Enabling or Disabling the Setup Menu Password

1. In the measurement mode, press .
2. Press / until 9LP is displayed on top line.
3. Press to move the arrow icon to the middle line and press / until PASS is displayed.
4. Press to move the arrow icon to the bottom line and enter a password by pressing / to enter each digit and to move to the next digit. Enter 0000 to disable the password and allow unlimited access to the setup menu.
5. Press to move the arrow icon to the top line.
6. Press to exit the setup menu and return to the measurement mode.

General Menu Settings

- **Manual Temperature** controls temperature compensation when no temperature sensor is attached to the meter.
- **Stirrer Speed** sets the stirrer speed from 1 (slowest) through 7 (fastest) and off – benchtop meters only.
- **Automatic Shutoff** controls whether the instrument will automatically turn off after 20 minutes without a keypress.

1. In the measurement mode, press .
2. Press / to scroll through the setup menu until 9En is displayed on the top line.
3. Press to accept the selection and move the arrow icon to the middle line.
4. Press / to scroll through dE9C for the manual temperature setting, St Ir for the stirrer speed setting and AUtO for the automatic shutoff setting.
5. Press to accept the selection and move the arrow icon to the bottom line.
6. To scroll through a list of options on the bottom line, press / until the desired option is displayed. To enter a numeric value for an option on the bottom line, press / to adjust each digit and to move to the next digit.
7. Press to accept the selection and move the arrow icon to the top line.
8. Repeat steps 3 through 7 to change another general setting or press to return to the measurement mode.

Time and Date Settings

- The date and time settings are saved with the datalog points and are included with the data that is sent to a computer or printer.
- The date format can be set to read month, day, year or day, month, year according to the user's preference.

1. In the measurement mode, press .
2. Press / to scroll through the setup menu until dAtE is displayed on the top line.
3. Press to accept the selection and move the arrow icon to the middle line.
4. Press / to scroll through HOUr for the current hour setting, t InE for the current minute setting, tYPE for the date format setting, dAtE for the current month setting, dAY for the current day setting and YEAr for the current year setting.
5. Press to accept the selection and move the arrow icon to the bottom line.
6. To scroll through a list of options on the bottom line, press / until the desired option is displayed. To enter a numeric value for an option on the bottom line, press / to adjust each digit and to move to the next digit.
7. Press to accept the selection and move the arrow icon to the top line.
8. Repeat steps 3 through 7 to change another time and date setting or press to return to the measurement mode.

AUTO-READ™, Continuous or Timed Measurement Settings

- In the AUTO-READ mode, the meter starts taking a measurement when is pressed. Once the measurement is stable, the display freezes and the data is logged and printed. The AUTO-READ mode also controls the stirrer. The stirrer starts when is pressed and stops when the measurement becomes stable.

- In the continuous mode, the meter is constantly taking measurements and updating the display. Press to log and print a measurement in this mode.

- In the timed mode, the meter is constantly taking measurements and updating the display. The meter logs and prints the measurement at the selected time interval.

1. In the measurement mode, press .
2. Press / to scroll through the setup menu until rEAd is displayed on the top line.
3. Press to accept the selection and move the arrow icon to the middle line.
4. Press / to scroll through tYPE for the measurement read type and t InE for the timed reading interval.
5. Press to accept the selection and move the arrow icon to the bottom line.
6. To scroll through a list of options on the bottom line, press / until the desired option is displayed. To enter a numeric value for an option on the bottom line, press / to adjust each digit and to move to the next digit.
7. Press to accept the selection and move the arrow icon to the top line.
8. Repeat steps 3 through 7 to change another measurement setting or press to return to the measurement mode.

Selecting the Measurement Parameter

In the measurement mode, the arrow icon on the left side of the display indicates the active line. Press to move the arrow icon to the desired measurement line and press / to scroll through the measurement parameters associated with the selected line.

The measurement lines and icons for the sympHony multi-parameter meter are shown below. The single and dual parameter meters will have fewer measurement lines and icons, depending on the meter capabilities.

pH
mV
RmV
ISE
No icon and no measurement – the measurement line is turned off

µS/cm or **mS/cm** for conductivity
mg/L for TDS
ppt for salinity
MΩ-cm for resistivity
No icon and no measurement – the measurement line is turned off

% sat for dissolved oxygen percent saturation
mg/L for dissolved oxygen concentration
No icon for barometric pressure
No icon and no measurement – the measurement line is turned off

Note: *If a measurement line is not needed, press to move the arrow icon to the measurement line that is not needed and press / until the measurement line is completely blank.*

Method Setup

The sympHony meters can save up to 10 methods when the GLP function is enabled. When a method is selected, the meter will use the last calibration performed in that method, so electrodes that share a common meter connection can be more easily interchanged.

1. To enable the GLP function:

   a. In the measurement mode, press .

   b. Press / until GLP is displayed on top line.

   c. Press to move the arrow icon to the middle line and press / until SEt is displayed.

   d. Press to move the arrow icon to the bottom line and press / until On is displayed.

   e. Press to move the arrow icon to the top line.

   f. Press to exit the setup menu and return to the measurement mode.

2. To display and change the current method number:

   a. In the measurement mode, press . The current method number will be displayed.

   b. Press / to select a new method number.

   c. Press to save the method number and press to return to the measurement mode.

Chapter VI
pH Technique

pH Setup Menu

Note: *Refer to the Meter Setup section for the Setup Menu Table, which contains a complete list of meter setup options and descriptions.*

1. In the measurement mode, press .
2. Press / to scroll through the setup menu until PH is displayed on the top line.
3. Press to accept the selection and move the arrow icon to the middle line.
4. Press / to scroll through rES for pH measurement resolution and bUF for the automatic buffer recognition setting.
5. Press to accept the selection and move the arrow icon to the bottom line.
6. To scroll through a list of options on the bottom line, press / until the desired option is displayed.
7. Press to accept the selection and move the arrow icon to the top line.
8. Repeat steps 3 through 7 to change another pH setting or press to return to the measurement mode.

pH Calibration

1. Prepare the electrode according to the electrode user guide.

2. In the setup mode, select the buffer set (USA or EUrO) that will be used for the automatic buffer recognition feature.

3. In the measurement mode, press until the arrow icon points to the top line, press until the **pH** icon is shown and press to begin the calibration.

4. Rinse the electrode and ATC probe with distilled water and place into the buffer.

5. Wait for the **pH** icon to stop flashing.

   a. Automatic buffer recognition – When the **pH** icon stops flashing the meter will display the temperature-corrected pH value for the buffer.

   b. Manual calibration – When the **pH** icon stops flashing the meter will display the actual pH value read by the electrode. Press until the first digit to be changed is flashing, press / to change the value of the flashing digit and continue to change the digits until the meter displays the temperature-corrected pH value of the buffer. Once the pH buffer value is set, press until the decimal point is in the correct location.

6. Press to proceed to the next calibration point and repeat steps 4 and 5 or press to save and end the calibration.

7. The actual electrode slope, in percent, will be displayed in the main field and SLP will be displayed in the lower field.

   a. For a one point calibration, press and / to edit the slope and press to return to the measurement mode.

   b. For a two or more point calibration, the meter will automatically proceed to the measurement mode after the slope is displayed.

pH Measurement

1. Rinse the electrode with distilled or deionized water. Shake off any excess water and blot the electrode dry with lint-free tissue.

2. Place the electrode into the sample.

   a. If the meter is in the continuous measurement mode, it will start reading immediately and continuously update the display. The **pH** icon will flash until the reading is stable. For mV, relative mV or ORP measurements, the **mV** or **RmV** icon will flash until the reading is stable. Once the reading is stable, log and print the measurement by pressing . If a benchtop meter is used and the stirrer is enabled, press to start the stirrer. Press again to turn off the stirrer before removing the electrode and stirrer from the sample.

   b. If the meter is in the AUTO-READ measurement mode, press to start the reading. The **AR** icon will flash until the reading is stable. Once the reading is stable, the meter will log and print the measurement and freeze the display. If a benchtop meter is used and the stirrer is enabled, the stirrer will turn on when is pressed and turn off when the reading is stable.

   c. If the meter is in the timed measurement mode, it will start reading immediately and continuously update the display. The meter will log and print the measurement at the frequency specified in the setup menu. If a benchtop meter is used and the stirrer is enabled, press to start the stirrer. Press again to turn off the stirrer before removing the electrode and stirrer from the sample.

3. Remove the electrode from the sample, rinse it with distilled or deionized water, blot it dry, place it in the next sample and repeat step 2.

4. Once all of the samples have been measured, rinse the electrode with distilled or deionized water and blot it dry. Consult the electrode user guide for proper storage techniques.

mV, Relative mV and ORP Technique

All meters with pH measurement capability include a mV, relative mV and ORP function. Measure the raw millivolt (mV) values of an electrode in the mV mode. Calibrate the relative millivolt (RmV) values of a redox electrode for oxidation-reduction potential (ORP) measurements in the relative mV and ORP mode.

Note: *The mV measurements are raw readings and cannot be calibrated. Use the relative mV mode to calibrate mV measurements.*

Relative mV and ORP Calibration

1. Prepare the electrode according to the electrode user guide.

2. In the measurement mode, press until the arrow icon points to the top line, press until the **RmV** icon is shown and press to begin the calibration.

3. Rinse the electrode with distilled water and place it into the standard.

4. Wait for the **RmV** icon to stop flashing. When the **RmV** icon stops flashing, the meter will display 000.0 RmV. Press until the first digit to be changed is flashing, press / to change the value of the flashing digit and continue to change the digits until the meter displays the millivolt value of the standard. To change the value to negative or positive number, press until none of the digits are blinking and the arrow icon is blinking and then press to change the sign of the millivolt value.

5. Press to save and end the calibration.

6. The millivolt offset will be displayed and the meter will automatically proceed to the measurement mode.

7. Refer to the **pH Measurement** section for instructions on mV, relative mV and ORP measurements.

Chapter VII

Dissolved Oxygen Technique

Dissolved Oxygen Setup Menu

Note: *Refer to the Meter Setup section for the Setup Menu Table, which contains a complete list of meter setup options and descriptions.*

1. In the measurement mode, press .
2. Press / to scroll through the setup menu until dO is displayed on the top line.
3. Press to accept the selection and move the arrow icon to the middle line.
4. Press / to scroll through rES for the % saturation resolution, rES for the mg/L concentration resolution, bAr for the barometer type (automatic or manual), PrES for the manual barometric pressure compensation value, SAL for the salinity compensation type (automatic or manual), SALF for the manual salinity correction value and CALt for the dissolved oxygen calibration type.
5. Press to select the option and move the arrow icon to the bottom line.
6. To scroll through a list of options on the bottom line, press / until the desired option is displayed. To enter a numeric value for an option on the bottom line, press / to adjust each digit and to move to the next digit.
7. Press to accept the selection and move the arrow icon to the top line.
8. Repeat steps 3 through 7 to change another dissolved oxygen setting or press to return to the measurement mode.

Dissolved Oxygen Calibration

- Prior to calibration, the dissolved oxygen probe must be prepared and polarized. The probe is continuously polarized when it is connected to the meter. When the probe is first connected or if the probe is disconnected for more than 60 minutes, connect the probe to the meter, connect the meter to a power source and wait 30 to 60 minutes for the probe to polarize. Disconnecting the probe for less than one hour will require 5 to 25 minutes for polarization.
- The meters will supply a polarization current to the dissolved oxygen probe even when the meter power is off. To maximize the meter battery life, unplug the probe if it will not be used for an extended period.

1. Select one of the following calibration modes in the setup menu.

   a. A Ir – An air calibration is performed in water saturated air using the calibration sleeve. This is the simplest and most accurate calibration. Due to the inherent differences between water saturated air and air saturated water, 102.3% saturation will be displayed when the calibration reading is stable.

      i. The highest possible accuracy is reached when calibration temperature is the same as the measuring temperature.

      ii. Moisten the sponge or absorbent cloth in the calibration sleeve with distilled water and insert the probe into the sleeve without touching the water saturated material. For BOD measurements, this calibration can be performed in a BOD bottle.

   b. H2O – A water calibration is performed using water that is 100% saturated with air. Bubble air into a water sample and gently stir the sample to prevent the buildup of air bubbles on the dissolved oxygen probe membrane.

   c. mAn – A manual calibration is performed using a water sample with a known concentration of dissolved oxygen. This method can be used to calibrate the dissolved oxygen probe to the value achieved by a Winkler titration.

i. A manual calibration involves performing a Winkler titration and using that sample as a calibration standard. The oxygen level result from the titration is entered in a manual calibration as the dissolved oxygen value. This correlates the meter input to the Winkler titration. This method is inherently less accurate, due to the possibility of titration errors.

d. SEtO – A zero point calibration is performed in an oxygen-free solution. A zero point calibration is not generally required unless measurements will be taken below 5% saturation or 0.5 mg/L. Zero the probe when using a new membrane, using fresh filling solution or when measuring dissolved oxygen levels below 1 mg/L or 10% saturation. An air calibration should be performed prior to the zero point calibration.

2. Allow the probe and calibration standard (water saturated air, air saturated water, Winkler standard or oxygen-free solution) to reach equilibrium.

3. In the measurement mode, press until the arrow icon points to the bottom line, press until the **% sat** or **mg/L** icon is shown and press to begin the calibration.

4. Wait for the dissolved oxygen reading to stabilize.

   a. If an air calibration is performed, the meter will display 102.3% and automatically return to the measurement mode.

   b. If a water calibration is performed, the meter will display 100.0% and automatically return to the measurement mode.

   c. If a manual calibration is performed, wait for the **mg/L** icon to stop flashing and enter the dissolved oxygen value by pressing until the first digit to be changed is flashing, press / to change the value of the flashing digit and continue to change the digits until the meter displays the correct dissolved oxygen value. Once the dissolved oxygen value is set, press until the decimal point is in the correct location.

   d. If a zero point calibration is performed, the meter will display 0.00 and automatically return to the measurement mode.

Dissolved Oxygen Measurement

1. Rinse the dissolved oxygen probe with distilled or deionized water. Shake off any excess water and blot the probe dry with lint-free tissue.

2. Place the dissolved oxygen probe into the sample.

   a. If the meter is in the continuous measurement mode, it will start reading immediately and continuously update the display. The **mg/L** or **% sat** icon will flash until the reading is stable. Once the reading is stable, log and print the measurement by pressing . If a benchtop meter is used and the stirrer is enabled, press to start the stirrer. Press again to turn off the stirrer before removing the probe and stirrer from the sample.

   b. If the meter is in the AUTO-READ measurement mode, press to start the reading. The **AR** icon will flash until the reading is stable. Once the reading is stable, the meter will log and print the reading and freeze the display. If a benchtop meter is used and the stirrer is enabled, the stirrer will turn on when is pressed and turn off when the reading is stable.

      If the BOD AUTO-STIR probe is used, press the button on the probe to start the AUTO-READ measurement.

   c. If the meter is in the timed measurement mode, it will start reading immediately and continuously update the display. The meter will log and print the measurement at the frequency specified in the setup menu. If a benchtop meter is used and the stirrer is enabled, press to start the stirrer. Press again to turn off the stirrer before removing the probe and stirrer from the sample.

3. Remove the dissolved oxygen probe from the sample, rinse it with distilled or deionized water, blot it dry, place it in the next sample and repeat step 2.

4. Once all of the samples have been measured, rinse the dissolved oxygen probe with distilled or deionized water and blot it dry. Consult the dissolved oxygen probe user guide for proper storage techniques.

Chapter VIII
Conductivity Technique

Conductivity Setup Menu

Note: *Refer to the Meter Setup section for the Setup Menu Table, which contains a complete list of meter setup options and descriptions.*

1. In the measurement mode, press .
2. Press / to scroll through the setup menu until COnd is displayed on the top line.
3. Press to accept the selection and move the arrow icon to the middle line.
4. Press / to scroll through tC for the temperature compensation type, COEF for the temperature coefficient value used for L In temperature compensation, tdSF for the TDS factor value used for total dissolved solids measurement, CELL for the nominal cell constant value of the conductivity probe, trEF for the reference temperature used for temperature compensation and tYPE for the conductivity cell type.
5. Press to accept the selection and move the arrow icon to the bottom line.
6. To scroll through a list of options on the bottom line, press / until the desired option is displayed. To enter a numeric value for an option on the bottom line, press / to adjust each digit and to move to the next digit.
7. Press to accept the selection and move the arrow icon to the top line.
8. Repeat steps 3 through 7 to change another conductivity setting or press to return to the measurement mode.

Conductivity Calibration

Note: *For an automatic calibration, the nominal cell constant of the conductivity probe must be entered in the setup menu before the calibration is performed. Refer to the conductivity probe user guide for the nominal cell constant value.*

1. In the measurement mode, press until the arrow icon points to the middle line, press until the **µS/cm** or **mS/cm** icon is shown and press to begin the calibration.

2. Rinse the conductivity probe with deionized water and place it into the conductivity standard.

3. To perform a manual calibration – The manual calibration screen will display the cell constant on the bottom line, the conductivity value of the calibration standard on the middle line and CELL on the top line. To change the cell constant, press until the first digit to be changed is flashing, press / to change the value of the flashing digit and continue to change the digits until the displayed conductivity value matches the value of the standard at the measured temperature. Once the value is set, press until the decimal point is in the correct location. Press to save and end the calibration.

   Note: *In the manual calibration screen, start changing the cell constant within five seconds or the meter will proceed to the automatic/direct calibration. If this occurs, press and hold to abort the calibration and repeat the calibration.*

4. To perform an automatic or direct calibration – Wait for the meter to go from the manual calibration screen to the automatic/direct calibration screen. The automatic/direct calibration screen will display the conductivity value of the calibration standard on the middle line and CAL.1 on the bottom line.

   a. Automatic calibration – When the **µS/cm** or **mS/cm** icon stops flashing, the meter will display the temperature-corrected conductivity of the standard.

b. Direct calibration – When the **µS/cm** or **mS/cm** icon stops flashing, the meter will display the actual conductivity value read by the probe. To change the conductivity value, press until the first digit to be changed is flashing, press / to change the value of the flashing digit and continue to change the digits until the correct conductivity value of the standard at the measured temperature is displayed. Once the value is set, press until the decimal point is in the correct location.

5. Press to proceed to the next calibration point, rinse the conductivity probe with distilled or deionized water, place it into the next conductivity standard and repeat step 4a / 4b or press to save and end the calibration.

6. The cell constant will be displayed in the main field and the meter will automatically advance to the measurement mode.

Conductivity Measurement

1. Rinse the conductivity probe with distilled or deionized water. Shake off any excess water and blot the probe dry with lint-free tissue.

2. Place the conductivity probe into the sample.

   a. If the meter is in the continuous measurement mode, it will start reading immediately and continuously update the display. The **µS/cm** or **mS/cm** icon will flash until the reading is stable. Once the reading is stable, log and print the measurement by pressing . If a benchtop meter is used and the stirrer is enabled, press to start the stirrer. Press again to turn off the stirrer before removing the probe and stirrer from the sample.

   b. If the meter is in the AUTO-READ measurement mode, press to start the reading. The **AR** icon will flash until the reading is stable. Once the reading is stable, the meter will log and print the measurement and freeze the display. If a benchtop meter is used and the stirrer is enabled, the stirrer will turn on when is pressed and turn off when the reading is stable.

   c. If the meter is in the timed measurement mode, it will start reading immediately and continuously update the display. The meter will log and print the measurement at the frequency specified in the setup menu. If a benchtop meter is used and the stirrer is enabled, press to start the stirrer. Press again to turn off the stirrer before removing the probe and stirrer from the sample.

3. Remove the conductivity probe from the sample, rinse it with distilled or deionized water, blot it dry, place it in the next sample and repeat step 2.

4. Once all of the samples have been measured, rinse the conductivity probe with distilled or deionized water and blot it dry. Consult the conductivity probe user guide for proper storage techniques.

Chapter IX
ISE Technique

ISE Setup Menu

Note: *Refer to the Meter Setup section for the Setup Menu Table, which contains a complete list of meter setup options and descriptions.*

1. In the measurement mode, press .
2. Press / to scroll through the setup menu until ISE is displayed on the top line.
3. Press to accept the selection and move the arrow icon to the middle line.
4. Press / to scroll through rES for the ISE measurement resolution, Un It for the ISE measurement units, rAn9 for the ISE calibration range and nL In for the non-linear blank correction feature.
5. Press to accept the selection and move the arrow icon to the bottom line.
6. To scroll through a list of options on the bottom line, press / until the desired option is displayed. To enter a numeric value for an option on the bottom line, press / to adjust each digit and to move to the next digit.
7. Press to accept the selection and move the arrow icon to the top line.
8. Repeat steps 3 through 7 to change another ISE setting or press to return to the measurement mode.

Preparation of Standards

Serial dilution with volumetric glassware is the best method for making a set of calibration standards. The calibration points should bracket the expected concentration range of the samples. There should be a tenfold change in concentration (i.e. 1 ppm and 10 ppm or 50 ppm and 500 ppm) between the standards. Fresh standard should be used at each calibration.

Serial Dilutions

Serial dilution is the best method for the preparation of standards. Serial dilution means that an initial standard is diluted, using volumetric glassware, to prepare a second standard solution. The second standard is similarly diluted to prepare a third standard, and so on, until the desired range of standards has been prepared.

1. To prepare a 10^{-2} M standard, pipette 10 mL of the 0.1 M standard into a 100 mL volumetric flask, dilute to the mark with deionized water and mix well.

2. To prepare a 10^{-3} M standard, pipette 10 mL of the 10^{-2} M standard into a 100 mL volumetric flask, dilute to the mark with deionized water and mix well.

3. To prepare a 10^{-4} M standard, pipette 10 mL of the 10^{-3} M standard into a 100 mL volumetric flask, dilute to the mark with deionized water and mix well.

To prepare standards with a different concentration use the following formula:

$$C_1 V_1 = C_2 V_2$$

Where:

C_1 = concentration of original standard

V_1 = volume of original standard

C_2 = concentration of standard after dilution

V_2 = volume of standard after dilution

ISE Calibration

The calibration standards should be prepared in the same ISE units as the desired sample results. Start the calibration with the lowest concentration calibration standard and work up to the highest concentration calibration standard. Any reagents, such as ionic strength adjustors, should be added to samples and standards as specified in the electrode user guide.

1. Prepare the electrode, standards and any other required solutions for use according to the electrode user guide.

2. In the measurement mode, press until the arrow icon points to the top line, press until the **ISE** icon is shown and press to begin the calibration.

3. Rinse the electrode with distilled or deionized water, shake any excess water off, blot it dry and place the electrode into the least concentrated standard.

4. Wait for **ISE** icon to stop flashing. Press until the first digit to be changed is flashing, press / to change the value of the flashing digit and continue to change the digits until the meter displays the concentration value of the standard. Once the standard value is set, press until the decimal point is in the correct location.

5. Press to proceed to the next lowest calibration standard and repeat steps 3 and 4, working from the lowest concentration standard to the highest concentration standard, or press to save and end the calibration.

6. The actual electrode slope, in mV per decade concentration, will be displayed in the main field and SLP will be displayed in the lower field.

   a. For a one point calibration, press and / to edit the slope. To change the sign of the slope to negative or positive, press until none of the digits are blinking and the arrow icon is blinking and press to change the sign of the slope. Press to return to the measurement mode.

   b. For a two or more point calibration, the meter will automatically proceed to the measurement mode after the slope is displayed.

ISE Measurement

1. Rinse the electrode with distilled or deionized water. Shake off any excess water and blot the electrode dry with lint-free tissue.

2. Place the electrode into the sample.

   a. If the meter is in the continuous measurement mode, it will start reading immediately and continuously update the display. The **ISE** icon will flash until the reading is stable. Once the reading is stable, log and print the measurement by pressing . If a benchtop meter is used and the stirrer is enabled, press to start the stirrer. Press again to turn off the stirrer before removing the electrode and stirrer from the sample.

   b. If the meter is in the AUTO-READ measurement mode, press to start the reading. The **AR** icon will flash until the reading is stable. Once the reading is stable, the meter will log and print the measurement and freeze the display. If a benchtop meter is used and the stirrer is enabled, the stirrer will turn on when is pressed and turn off when the reading is stable.

   c. If the meter is in the timed measurement mode, it will start reading immediately and continuously update the display. The meter will log and print the measurement at the frequency specified in the setup menu. If a benchtop meter is used and the stirrer is enabled, press to start the stirrer. Press again to turn off the stirrer before removing the electrode and stirrer from the sample.

3. Remove the electrode from the sample, rinse it with distilled or deionized water, blot it dry, place it in the next sample and repeat step 2.

4. Once all of the samples have been measured, rinse the electrode with distilled or deionized water and blot it dry. Consult the electrode user guide for proper storage techniques.

Chapter X
Data Archiving and Retrieval

Datalog and Calibration Log

The sympHony meters have a 200 point datalog that includes the last ten calibrations that were successfully performed on the meter.

Datalog Deletion Setting

The datalog deletion setting determines if the meter will automatically delete the datalog after it is downloaded to a printer or computer and if the meter will overwrite the datalog points when the datalog is full. If the datalog deletion setting is set to YES, the meter will automatically delete the datalog after the datalog is downloaded to a printer or computer. The meter will also display an error 038 message when all 200 datalog points are filled and the datalog must be downloaded to a printer or computer to clear the error message. If the datalog deletion setting is set to nO, the meter will overwrite the oldest datalog point when all 200 datalog points are filled.

1. In the measurement mode, press .
2. Press / until LOG is displayed on top line.
3. Press to accept the selection and move the arrow icon to the middle line and press / until dEL is displayed.
4. Press to accept the selection and move the arrow icon to the bottom line and press / until YES or nO is displayed.
5. Press to accept the selection and move the arrow icon to the top line.
6. Press to save the setup option and return to measurement mode.

Note: *If the datalog is not required, set the datalog deletion setting to nO to prevent the error 038 (datalog full) message.*

Viewing and Downloading the Datalog and Calibration Log

The sympHony meters include datalog view, datalog download and calibration log download features.

To view the datalog:

1. In the measurement mode, press .
2. Press / to scroll to u IEw to view the datalog.
3. Press . The meter will display the date/time screen. The datalog number will be on the top of the screen and the time, date and year the datalog was recorded will be on the top, middle and bottom display lines respectively. Press / to scroll through the datalog.
4. Press . The meter will display the data point associated with the selected date/time screen. Press / to scroll through the datalog or press to return to the date/time screen.
5. To exit the log view mode, press until the meter displays the date/time screen and press .

To send the datalog or calibration log to a printer or computer:

1. Connect the meter to a printer or computer and verify the meter baud rate and output settings in the setup menu.
2. In the measurement mode, press .
3. Press / to scroll to SEnd to download the datalog or CALO to download the calibration log.
4. Press to send the selected data to the printer or computer.

Chapter XI
Declaration of Conformity

Address: 166 Cummings Center
Beverly, MA 01915
USA

We declare that the following products described below conform to the Directive and Standard listed below:

Product(s): Meters for measuring pH, conductivity, dissolved oxygen, and/or ISE
Benchtop models are rated 100 to 240 VAC, 50/60 Hz, 0.5 A
Handheld models use four non-rechargeable AA batteries

Benchtop Meters	**Portable Meters**
SB70P benchtop meter	SP70P portable meter
SB70D benchtop meter	SP70D portable meter
SB70C benchtop meter	SP70C portable meter
SB80PI benchtop meter	SP80PI portable meter
SB80PD benchtop meter	SP80PD portable meter
SB80PC benchtop meter	SP80PC portable meter
SB90M5 benchtop meter	SP90M5 portable meter

Equipment Class: Measurement, control and laboratory
Benchtop models are EMC Class A
Portable models are EMC Class D

Directive(s) and Standard(s):

- 89/336/EEC – Electromagnetic Compatibility (EMC Directive)
  - EN 61326:1997 + A1:1998 + A2:2001 – Electrical equipment for measurement, control, and laboratory use – EMC requirements
- 73/23/EEC – Low Voltage Directive (LVD)
  - EN 61010-1:2001 – Safety requirements for electrical equipment for measurement, control, and laboratory use – general requirements

Manufacturer's Authorized Representative: Date:

Patrick Chiu
Senior Quality Assurance Engineering,
Regulatory Compliance

February 22, 2005

WEEE Compliance:

This product is required to comply with the European Union's Waste Electrical & Electronic Equipment (WEEE) Directive 2002/96/EC. It is marked with the following symbol:

We have contracted with one or more recycling/disposal companies in each EU Member State and this product should be disposed of or recycled through them. Further information on compliance with these Directives, the recyclers in your country, and information on Thermo Scientific Orion products which may assist the detection of substances subject to the RoHS Directive are available at www.thermo.com/WEEERoHS.

Chapter XII
Troubleshooting

Meter Self Test

1. Disconnect all of the electrodes and probes from the meter and cover all of the meter inputs with the black caps.

2. Power on the meter, wait until the software revision is displayed and press .

3. All the segments on the display will light up. Visually inspect the display segments and press .

4. All the segments on the display will turn off. Visually inspect the display segments and press .

5. The display will read KEY. Press every key on the keypad one at a time in any order. If the keys are not pressed within five seconds of one another, the display will read Err 033, which indicates a key failure. Press to clear the error 033 message and complete the self test. If all the keys are pressed and functioning, the meter will restart and proceed to the measurement mode.

Note: *If the meter reads Err 034 during the self test, ensure that all of the electrodes are disconnected from the meter, all of the meter inputs are covered with the black caps and the BNC shorting cap is firmly attached to the BNC meter input. This error code usually occurs if the BNC shorting cap is missing or not fully connected to the BNC meter input during the meter self test.*

Meter Error Codes

- If the reading on the screen is flashing 9999, the value is out of range. Perform the meter self test, clean the electrode according to the electrode user guide and re-calibrate the electrode with new standards.
- If the ⚠ icon is lit and the reading is flashing, the sensor needs to be calibrated according to the user's set calibration interval or the pH slope is outside the range of 85 % to 115%.
- Press to clear an error code. Error codes show Err on the middle line and a set of three alphanumeric characters on the bottom line. Some of these codes are errors, some are warnings and some are purely informational.

Error Code	Description	Troubleshooting
002, 026, E##, F##	Hardware or Memory Error	Press to clear the error. If error occurs again, contact Technical Support.
005	Value Outside Allowable Range	Press and re-enter the value. Check meter specifications for the allowable range of values.
033	Keypad Failure	Repeat the self test. When the meter reads KEY, press all of the keys, including the power key, within five seconds of one another.
034	BNC Input Failure	Disconnect all the electrodes from the meter, connect the BNC shorting cap on the meter and repeat the self test.
038	Datalog Full	Download the datalog to a printer or computer or change the datalog setting to LOG, dEL, nO in the setup menu so the meter deletes the datalog points when the datalog is full.
D##	Remote Control Error	Check the programming instructions to verify the correct commands, names and values.
107	pH Calibration Standard Error	The millivolts measured during calibration are the same for two buffers. Review the calibration procedure and verify that the electrode was placed in the buffers at the appropriate time. Clean the electrode according to the electrode user guide. Re-calibrate the electrode with fresh buffers.

Error Code	Description	Troubleshooting
109	Bad pH Slope or Calibration Offset	Clean the electrode according to the electrode user guide. Re-calibrate the electrode with new buffers.
306	ISE Automatic Blank Error	Disable the automatic blank feature in the setup menu and re-calibrate the meter without using a zero concentration standard.
307	ISE Calibration Standard Error	The millivolts measured during calibration are the same for two standards. Review the calibration procedure and verify that the electrode was placed in the standards at the appropriate times. Clean the electrode according to the electrode user guide. Re-calibrate the electrode with fresh standards.
309	Bad ISE Slope	Clean the electrode according to the electrode user guide. Re-calibrate the electrode with freshly prepared standards.
707	Conductivity Calibration Standard Error	The conductivity value measured during calibration is the same for two standards. Review the calibration procedure and verify that the conductivity probe was placed in the standards at the appropriate times. Clean the conductivity probe according to the probe user guide. Re-calibrate the probe with new standards.
709	Conductivity Cell Constant Error	The cell constant is not in the range of 0.001 to 199.0 cm^{-1}. Clean the conductivity probe according to the probe user guide. Re-calibrate the probe with new standards.
808	Bad Zero Point DO Slope	An air calibration should be performed before the zero point calibration. Verify that a solution with zero oxygen is being used for the zero point calibration. A solution with 15 grams of Na_2SO_3 dissolved in 250 mL of distilled water is recommended.
809	Bad DO Slope	Connect the probe to the meter, power on the meter and let the probe to polarize for at least 30 minutes. For an air calibration, check that the sponge in the calibration sleeve is damp and there is no water on the probe membrane . For a water calibration, bubble air into the sample and stir to keep bubbles off the membrane. Clean the DO probe according to the probe user guide. Re-calibrate the DO probe.

General Troubleshooting

Problem:	The display freezes and the measurement values will not change.
Solution:	The meter is in the AUTO-READ measurement mode (the AR icon will appear in the top, right corner of the display). Press to start a new measurement or set the meter to the continuous measurement mode in the setup menu.
Problem:	When I press the meter displays wA It.
Solution:	The meter is printing and cannot enter the calibration mode until the printing is complete. This should rarely occur if the meter is set to a 9600 baud rate. If the meter is at a lower baud rate, the delay will be longer.
Problem:	The meter did not accept the change I made in the setup menu.
Solution:	After making a change in the setup menu, press until the arrow icon points to the top line (confirms the change) and then press to save the change and return to the measurement mode.
Problem:	How do I abort a calibration?
Solution:	Press and hold to abort any meter operation and return to the measurement mode.
Problem:	The printout is a string of numbers and units with commas.
Solution:	The output format in the setup menu is set to the computer output. Change the output format to the printer output in the setup menu. The printer baud rate is set incorrectly in the setup menu. Change the baud rate to the correct value for the printer that is being used.
Problem:	When I press the stirrer button, the stirrer doesn't work.
Solution:	The current stirrer setting is off. Set the speed to 1 through 7 in the setup menu.
Problem:	The timed reading time entry screen does not appear in the setup menu.
Solution:	The meter is in the AUTO-READ or continuous mode. When the meter is set to the timed mode, the next setup screen will be for time entry.

pH Troubleshooting

Problem: The meter does not recognize the pH buffer value during calibration.

Solution: Verify that the correct buffer set was selected in the setup menu. The meter uses the raw mV reading of the electrode to recognize a buffer during calibration. As the electrode ages or becomes dirty, its mV readings will drift and you may need to manually enter the pH buffer value when calibrating.

ISE Troubleshooting

Problem: It takes several minutes for the readings to stabilize during a calibration.

Solution: The concentration range in the setup menu is set to low. Change the concentration range to high.
The ISE resolution is set to 3 digits in the setup menu. Change the ISE resolution to 2 digits for faster stabilization of the readings.

Problem: When I use the automatic blank correction setting and calibrate an ISE, the meter gives a slope that is too low or cannot be manually checked.

Solution: Turn the automatic blank correction setting off in the setup menu.

Conductivity Troubleshooting

Problem: The meter does not recognize the conductivity standard during calibration.

Solution: Verify that the default cell constant was entered in the setup menu. The cell constant is usually printed on the conductivity probe cable. Verify that the conductivity standard is one that is programmed into the meter. Re-calibrate with a fresh standard.

Problem: The temperature coefficient value does not appear in the setup menu.

Solution: The current temperature compensation setting is nonlinear or off. Change the temperature compensation to linear and the next screen will be the temperature coefficient value entry screen.

Problem: The measurement is out of range when it should be in range.

Solution: Check that the conductivity probe is fully immersed in the solution. Verify that the cell constant is correct for the conductivity probe that is connected to the meter. Verify that the cell type selected in the setup menu is set to Std.

Dissolved Oxygen Troubleshooting	
Problem:	The manual barometric pressure entry screen does not appear in the setup menu.
Solution:	The barometric pressure compensation is set to automatic in the setup menu. Change the barometric pressure compensation to manual and the next screen will be the manual pressure entry screen.
Problem:	The manual salinity factor entry screen does not appear in the setup menu.
Solution:	The salinity correction is set to automatic in the setup menu. Change the salinity correction to manual and the next screen will be the salinity factor entry screen.
Problem:	The AUTO-STIR BOD probe does not turn on when the button on the probe is pressed.
Solution:	The read type must be set to AUTO-READ in the setup menu and the stirrer speed must be set from 1 to 7 to initiate a measurement and start stirring by pressing the button on the AUTO-STIR BOD probe.

Assistance

After troubleshooting all components of your measurement system, contact Technical Support at 1-800-VWR-SUPP. For the most current contact information, visit www.vwr.com.

Warranty

For the most current warranty information, visit www.vwr.com.

Chapter XIII
Meter Specifications

Meter Specifications

Portable and Benchtop Meter Environmental Operating Conditions	
Operating Ambient Temperature	5 to 45 °C
Operating Relative Humidity	5 to 85 %, non-condensing
Storage Temperature	-20 to +60 °C
Storage Relative Humidity	5 to 85 %, non-condensing
Pollution	Degree 2
Overvoltage	Category II
Altitude	Up to 2000 meters
Weight	Portable: 0.45 kg Benchtop: 0.91 kg
Size	Portable: 4.8 cm (H) x 9.7 cm (W) x 21.3 cm (D) Benchtop: 9.4 cm (H) x 17.0 cm (W) x 22.4 cm (D)
AC Powered Meters	Indoor use only
Battery Operated Meters	Indoor or outdoor use
Regulatory and Safety	CE, CSA, TÜV, UL, FCC Class limits
Case Material	ABS
Shock and Vibration	Vibration, shipping/handling per ISTA #1A Shock, drop test in packaging per ISTA #1A
Enclosure (designed to meet)	IP67 (portable meter) IP54 (benchtop meter)

Universal Power Adapter Environmental Operating Conditions	
Operating Ambient Temperature	0 to 50 °C
Operating Relative Humidity	0 to 90 %, non-condensing
Storage Temperature	-20 to +75 °C
Storage Relative Humidity	0 to 90 %, non-condensing
Pollution	Degree 2
Overvoltage	Category II
Operating Altitude	Up to 2000 meters
Benchtop Meters	Indoor use only

Meter Parameter Specifications

The following specifications are for the complete line of sympHony meters. Single and dual parameter meters will not include all of the parameters listed here.

pH	
Range	-2.000 to 19.999
Resolution	0.1, 0.01, 0.001
Relative Accuracy	± 0.002
Calibration Points	1 to 5
Millivolts, Relative Millivolts, ORP	
Range	± 1999.9 mV
Resolution	0.1 mV
Relative Accuracy	± 0.2 mV or 0.05 % of reading, whichever is greater
ISE	
Range	0 to 19999
Resolution	1 to 3 significant figures
Relative Accuracy	± 0.2 mV or 0.05 %, whichever is greater
Displayed Units	M, mg/L, %, ppb or no units
Calibration Features	Linear point to point, selectable non-linear automatic blank correction and low concentration range stability

Dissolved Oxygen	
Range	0.00 to 90.0 mg/L 0.0 to 600 %
Resolution	0.1, 0.01 mg/L 0.1, 1 %
Relative Accuracy	± 0.2 mg/L ± 2 %
Salinity Factor	0 to 45 ppt
Barometric Pressure	450 to 850 mm Hg
Calibration Types	Water saturated air, air saturated water, manual (Winkler), zero point
Probe Type	Polarographic
Conductivity	
Range	0.000 to 3000 mS/cm, auto-resolution with cell constant dependence
Resolution	4 significant figures down to 0.001 µS/cm, cell constant dependant
Relative Accuracy	0.5 % ± 1 digit or 0.01 µS/cm, whichever is greater
Cell Constant	0.001 to 199.9 cm^{-1}
Reference Temperature	15 °C, 20 °C or 25 °C
Resistivity Range	0.0001 to 100 Megohm
Resistivity Resolution	Automatic
Resistivity Relative Accuracy	0.5 % ± 1 digit
Salinity Range	0.1 to 80.0 ppt NaCl equivalent, 0.1 to 42 ppt practical salinity
Salinity Resolution	0.1 ppt
Salinity Relative Accuracy	0.1 ± 1 digit
TDS Range	0 to 19999 mg/L
TDS Resolution	1 mg/L
TDS Relative Accuracy	0.5 % ± 1 digit
Temperature	
Range	-5 to 105 °C
Resolution	0.1 up to 99.9 °C, 1.0 over 99.9 °C
Relative Accuracy	± 0.1 °C

Ordering Information

VWR Cat. No.	Description
11388-354	SB70P benchtop pH meter with universal power adapter and user guide
11388-368	SB70P benchtop pH meter with refillable pH electrode (14002-850), universal power adapter and user guide
11388-326	SP70P portable pH meter with batteries and user guide
11388-340	SP70P portable pH meter with gel-filled 3-in-1 pH/ATC electrode (14002-860), batteries and user guide
11388-350	SB70D benchtop DO meter with universal power adapter and user guide
11388-364	SB70D benchtop DO meter with DO probe (11388-374), universal power adapter and user guide
11388-322	SP70D portable DO meter with batteries and user guide
11388-336	SP70D portable DO meter with DO probe (11388-374), batteries and user guide
11388-352	SB70C benchtop conductivity meter with universal power adapter and user guide
11388-366	SB70C benchtop conductivity meter with conductivity probe (11388-372), universal power adapter and user guide
11388-324	SP70C portable conductivity meter with batteries and user guide
11388-338	SP70C portable conductivity meter with conductivity probe (11388-372), batteries and user guide
11388-348	SB80PI benchtop pH/ISE meter with universal power adapter and user guide
11388-362	SB80PI benchtop pH/ISE meter with refillable pH electrode (14002-850), universal power adapter and user guide
11388-320	SP80PI portable pH/ISE meter with batteries and user guide
11388-334	SP80PI portable pH/ISE meter with gel-filled 3-in-1 pH/ATC electrode (14002-860), batteries and user guide
11388-344	SB80PD benchtop pH/DO meter with universal power adapter and user guide
11388-358	SB80PD benchtop pH/DO meter with refillable pH electrode (14002-850), DO probe (11388-374), universal power adapter and user guide

VWR Cat. No.	Description
11388-316	SP80PD portable pH/DO meter with batteries and user guide
11388-330	SP80PD portable pH/DO meter with gel-filled 3-in-1 pH/ATC electrode (14002-860), DO probe (11388-374), batteries and user guide
11388-346	SB80PC benchtop pH/conductivity meter with universal power adapter and user guide
11388-360	SB80PC benchtop pH/conductivity meter with refillable pH electrode (14002-850), conductivity probe (11388-372), universal power adapter and user guide
11388-318	SP80PC portable pH/conductivity meter with batteries and user guide
11388-332	SP80PC portable pH/conductivity meter with gel-filled 3-in-1 pH/ATC electrode (14002-860), conductivity probe (11388-372), batteries and user guide
11388-342	SB90M5 benchtop pH/ISE/DO/conductivity meter with universal power adapter and user guide
11388-356	SB90M5 benchtop pH/ISE/DO/conductivity meter with Posi-pHlo™ pH electrode (14002-782), DO probe (87000-086), conductivity probe (11388-382), universal power adapter and user guide
11388-314	SP90M5 portable pH/ISE/DO/conductivity meter with batteries and user guide
11388-328	SP90M5 portable pH/ISE/DO/conductivity meter with 3-in-1 pH/ATC electrode (14002-860), DO probe (11388-374), conductivity probe (11388-372), batteries and user guide
14002-756	Electrode stand and holder
87000-060	Universal power adapter
87000-090	Stirrer probe with paddle for benchtop meters
11388-400	Printer with printer interface cable (VWR Cat. No. 250302-001)
87000-066	21CFR Part 11 software with computer interface cable (VWR Cat. No. 14004-322)
87000-062	RS232 computer interface cable and RS232 printer interface cable
11388-388	Rugged hard field case for portable meters
11388-402	Soft field case for portable meters
87000-074	Impact jacket with electrode storage sleeve for portable meters
87000-076	Electrode storage sleeve for portable meters

VWR Cat. No.	Description
14002-850	Refillable combination pH electrode with glass body
14002-780	Refillable combination pH electrode with epoxy body
14002-782	Posi-pHlo™ clog-resistant combination pH electrode with glass body
14002-784	Posi-pHlo™ clog-resistant combination pH electrode with epoxy body
14002-764	Low-maintenance gel-filled pH electrode with epoxy body
14002-860	Low-maintenance gel-filled 3-in-1 pH/ATC electrode with epoxy body
11388-378	ATC probe with epoxy body
11388-380	ATC probe with glass body
14002-794	Ammonia combination ion selective electrode
14002-786	Chloride combination ion selective electrode
14002-788	Fluoride combination ion selective electrode
14002-796	Nitrate half-cell ion selective electrode (requires a double junction reference electrode, VWR Cat. No. 14002-854)
14002-790	Silver sulfide combination ion selective electrode
11388-374	DO probe with calibration sleeve and 3 meter cable
87000-086	Rugged DO probe with 1.5 meter cable
87000-088	Rugged DO probe with 3 meter cable
11388-370	BOD AUTO-STIR DO probe with calibration sleeve
87000-092	Conductivity probe, K = 0.1, with 0.01 µS/cm to 300 µS/cm range and 1 meter cable
11388-372	Conductivity probe, K = 1.0, with 1 µS/cm to 20 mS/cm range and 1 meter cable
11388-376	Conductivity probe, K = 1.0, with 10 µS/cm to 200 mS/cm range and 3 meter cable
11388-382	Conductivity probe, K = 0.55, with 1 µS/cm to 200 mS/cm range and 1.5 meter cable
11388-384	Conductivity probe, K = 0.55, with 1 µS/cm to 200 mS/cm range and 3 meter cable
14002-856	Posi-pHlo™ clog-resistant combination ORP/redox electrode with epoxy body
14002-858	Refillable combination ORP/redox electrode with glass body

Visit www.vwr.com for additional meter kits, accessories, electrodes and solutions.

Appendix A
Special Meter Setup Menu Features

pH Setup Menu Features

Automatic buffer recognition

The sympHony pH meters are capable of automatically recognizing pH 1.68, 4.01, 6.86, 7.00, 9.18, 10.01 and 12.46 buffers during a pH calibration. During a calibration, the meter uses the selected buffer set and the raw mV reading of the pH electrode in the buffer to recognize and display the buffer value at the measured temperature. The raw mV value must be about ± 30 mV from the theoretical mV reading of the buffer in order for the meter to automatically recognize the buffer.

Buffer	mV Range	Buffer	mV Range	Buffer	mV Range
1.68	+285 to +345	7.00	- 30 to + 30	10.01	-207 to -147
4.01	+207 to +147	9.18	-99 to -159	12.46	-293 to -353
6.86	+38 to -22				

Dissolved Oxygen Setup Menu Features

Barometric Pressure Compensation

The sympHony dissolved oxygen meters have an internal barometer that is used for pressure compensated dissolved oxygen readings. The meter can also use manual barometric pressure compensation if dissolved oxygen is being measured with a submerged probe or in a pressurized vessel. The pressure must be entered as mm Hg (mercury). 1 mm Hg = 0.03937 inch Hg = 1.3332 hPa (mBar) = 0.01934 PSI.

Salinity Correction

Automatic salinity correction for dissolved oxygen readings is available on sympHony dissolved oxygen meters that have a conductivity mode. The meter uses the conductivity value read by the conductivity probe to calculate the salinity correction factor and applies the factor to dissolved oxygen readings reported as mg/L.

The meter can also use manual salinity correction for dissolved oxygen readings reported as mg/L. The manual salinity correction factor must be entered as ppt (parts per thousand).

Conductivity at 20 °C (mS/cm)	Salinity Correction Value (ppt)	Conductivity at 20 °C (mS/cm)	Salinity Correction Value (ppt)	Conductivity at 20 °C (mS/cm)	Salinity Correction Value (ppt)
5	3	20	13	35	25
6	4	21	14	36	25
7	4	22	15	37	26
8	5	23	15	38	27
9	6	24	16	39	28
10	6	25	17	40	29
11	7	26	18	42	30
12	8	27	18	44	32
13	8	28	19	46	33
14	9	29	20	48	35
15	10	30	21	50	37
16	10	31	22	52	38
17	11	32	22	54	40
18	12	33	23	56	42
19	13	34	24		

This table was calculated from the International Oceanographic Tables, Vol. 1, National Institute of Oceanography of Great Britain, Womley, Godaming, Surrey, England and Unesco, Paris 1971.

Conductivity Setup Menu Features

Temperature Compensation and Reference Temperature

The sympHony conductivity meters have the ability to use a temperature compensation feature that calculates and displays the conductivity measurements at a reference temperature of 15 °C, 20 °C or 25 °C. The temperature compensation can be set as linear for most aqueous samples, non-linear for ultra pure and low ionic strength samples or off for non-temperature compensated conductivity measurements. The closer the sample temperature is to the selected reference temperature, the more accurate the conductivity measurement will be, especially if the temperature compensation coefficient is estimated or inaccurate.

The conductivity of a solution with a specific electrolyte concentration changes with temperature and this relationship is described by the temperature coefficient of the solution. The meter has a default temperature coefficient of 2.1 percent change in conductivity per ˚C, which is representative of many aqueous samples.

Solution (25 °C to 50 °C)	Temperature Coefficient (% / °C)
Ultra Pure Water	4.55
Salt (NaCl)	2.12
5% NaOH	1.72
Dilute Ammonia	1.88
10% HCl	1.32
5% Sulfuric Acid	0.96
98% Sulfuric Acid	2.84
Sugar Syrup	5.64

Total Dissolved Solids (TDS)

The sympHony conductivity meters measure TDS as the total amount of dissolved inorganics in a solution. The dissolved inorganics carry a current that is measured by the conductivity probe. Since there is a direct relationship between conductivity and TDS, conductivity readings are used to estimate the presence of inorganics. The user must enter a TDS factor between 0.01 and 10 mg/L in the setup menu.

The standard method of determining TDS involves evaporating a sample to dryness at 180 ˚C and weighing the residue. The TDS factor is calculated by taking the residue weight and dividing it by the sample conductivity. Subsequent conductivity readings are multiplied by the TDS factor to determine the TDS value of the sample.

Automatic Calibration

The sympHony conductivity meters are capable of automatically recognizing 100 µS/cm, 1413 µS/cm and 12.9 mS/cm conductivity standards when the nominal cell constant of the conductivity probe is entered in the setup menu. For the meter to recognize the conductivity standard, the entered cell constant must be accurate within a factor of 3. For example, if the actual cell constant is 1.0 cm^{-1}, entering a nominal cell constant in the range of 0.3 cm^{-1} to 3.0 cm^{-1} would allow the meter to identify the conductivity standard and perform the automatic calibration.

ISE Setup Menu Features

Concentration Range

The sympHony ISE meters can be set for a high or low ISE concentration range that is used to determine the calibration stability criteria. If a high ISE concentration range is selected, the meter will perform a normal calibration with no delay in displaying the calibration standard value. If a low ISE concentration range is selected, the meter will wait about three to five minutes before displaying a stable reading for the calibration standard values. The delay will depend on the species being measured and the concentration of the calibration standards. The low ISE concentration range is designed to improve the accuracy of low concentration measurements by allowing the electrode to have a longer amount of time to stabilize in the calibration standards.

Automatic Blank Correction

The sympHony ISE meters have an ISE automatic blank correction feature that uses an algorithm to compensate for the non-linearity of the ion selective electrode in low-level standards and samples. Since the automatic blank correction feature requires the use of a set of non-linear equations that can only be calculated numerically, the user cannot analytically verify the calibration and the average slope value that is displayed on the meter may be outside of the slope range that is specified in the electrode user guide. In applications were analytical verification is required, the automatic blank correction feature should be turned off.

254503-001 Rev. B